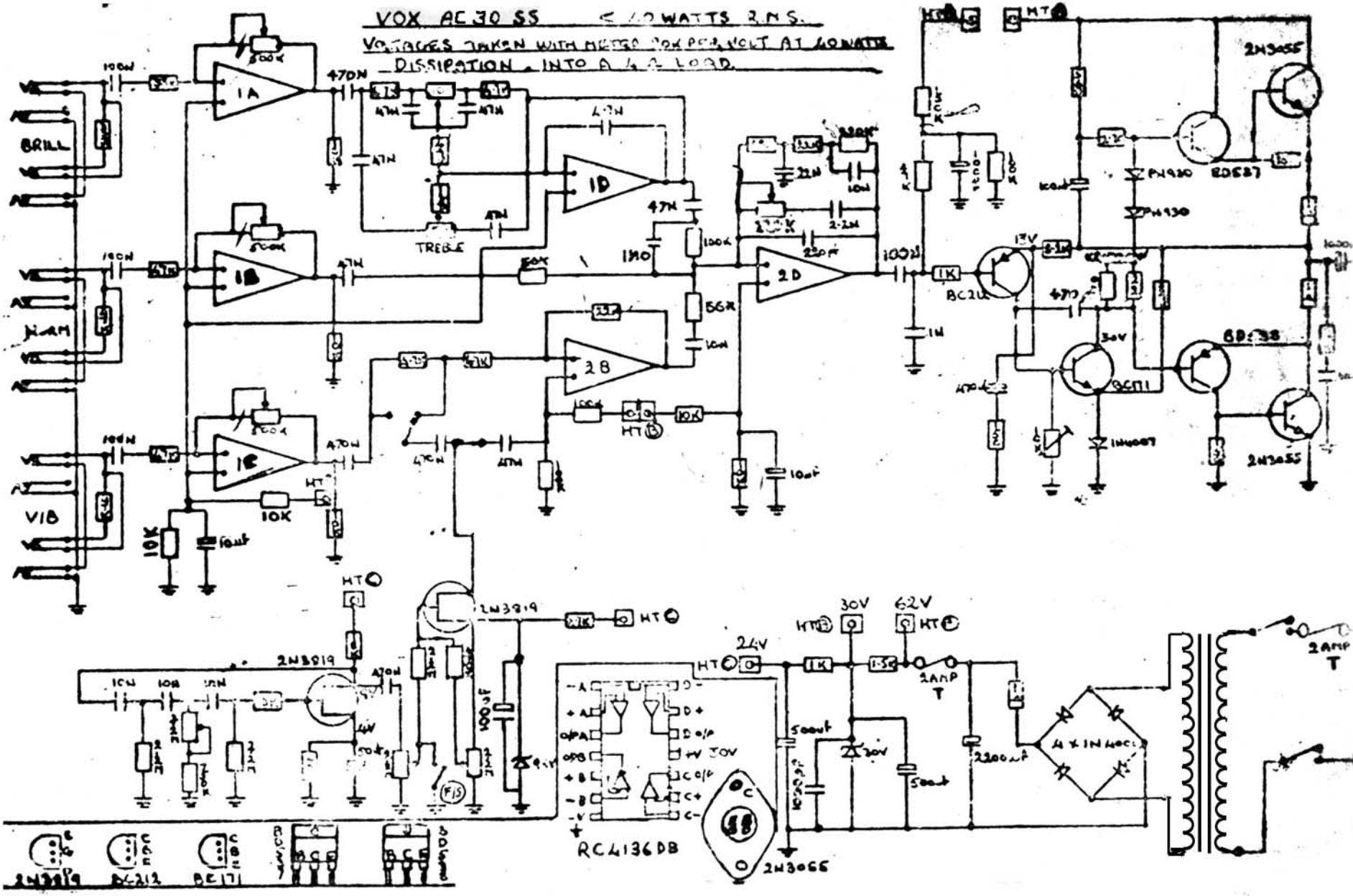
VOX AC30 SS
VOLTAGES TAKEN WITH METER 20K PER VOLT AT 40 WATTS
DISSIPATION INTO A 4 Ω LOAD.
BRILL
NORM
VIB
1A
1B
1C
1D
2B
2D
TREBLE
2N3055
BC212
BC171
BD538
2N3819
RC4136DB
24V
30V
62V
2AMP T
4 x IN4001
2200uF
500uF
10uF
100uF
10K
1K
1N4007
PN930
ED537
2N3055
2N3819
BC212
BC171