THIS SCHEMATIC FOR AMPS STARTED IN 1963

Cable Color Code
For EA7/8P
INST. CABLE

1 - GREEN - SHIELDED
2 - Red - SHIELDED
3 - yellow
4 - Blue
5 - Brown - SHIELDED
6 - SHIELD

EA-7P

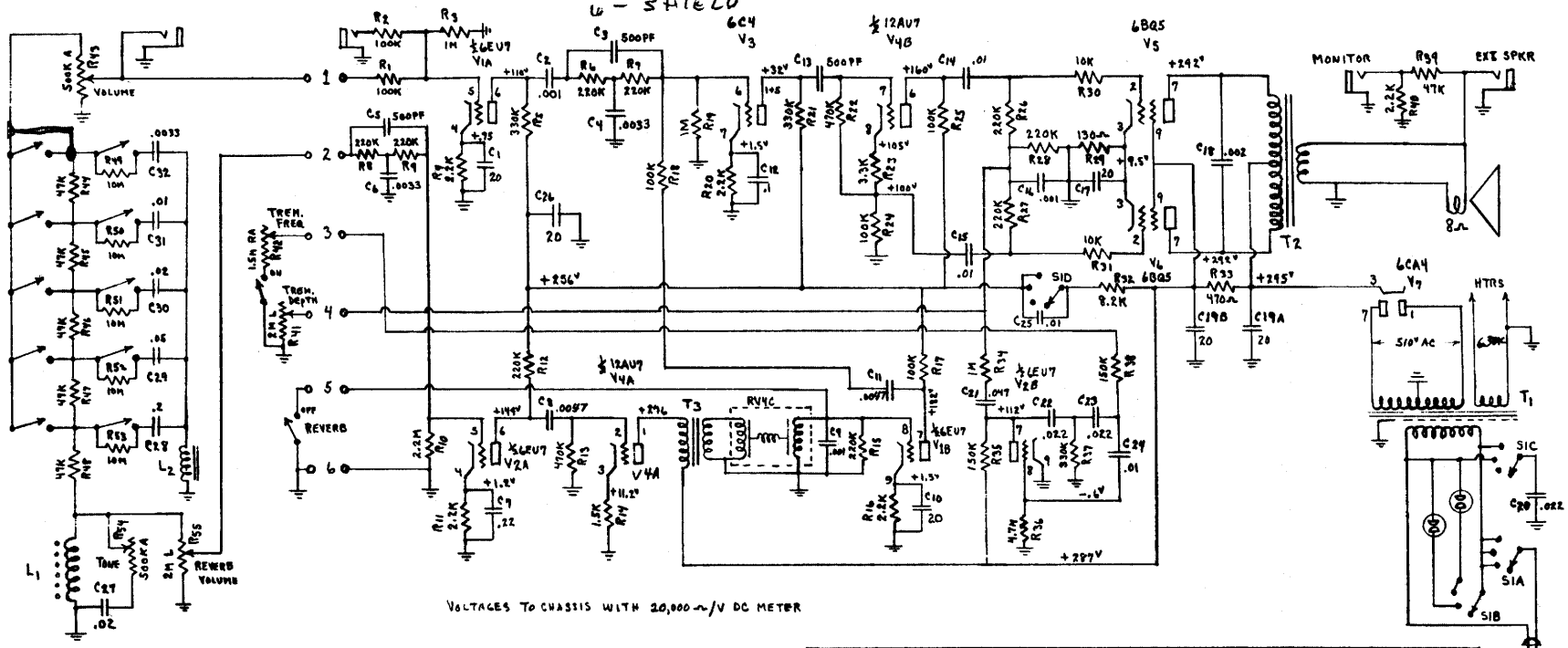

VOLTAGES TO CHASSIS WITH 20,000 Ω/V DC METER

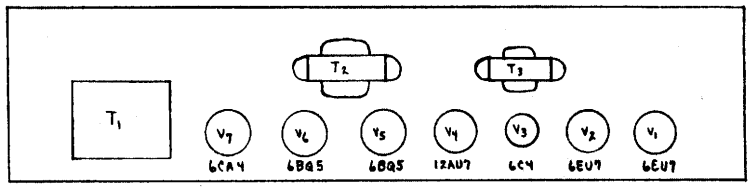

L1	Pickup	CPA-1023
L2	CHOKE	GA90C-1
T1	POWER XFMR	TF 8A-P
T2	OUTPUT "	TF 18-01
T3	DRIVER "	TF E6400
S1	4 POLE, 4 POS	SW 78
REVERB UNIT		RV4C

R41	TREMOLO DEPTH CONTROL	2M LINEAR	CBA 811-3708
R42	" FREQ "	1.5M REVERSED	CBA 811-3711
R43	INSTRUMENT VOL "	500K AUDIO	CBA 811-3707
R54	" TONE "	500K "	CBA 811-3707
R55	REVERB. VOL "	2M LINEAR	CBA 811-3708

CAPACITORS IN MFD
RESISTORS IN OHMS K = 1000, M = 1000000