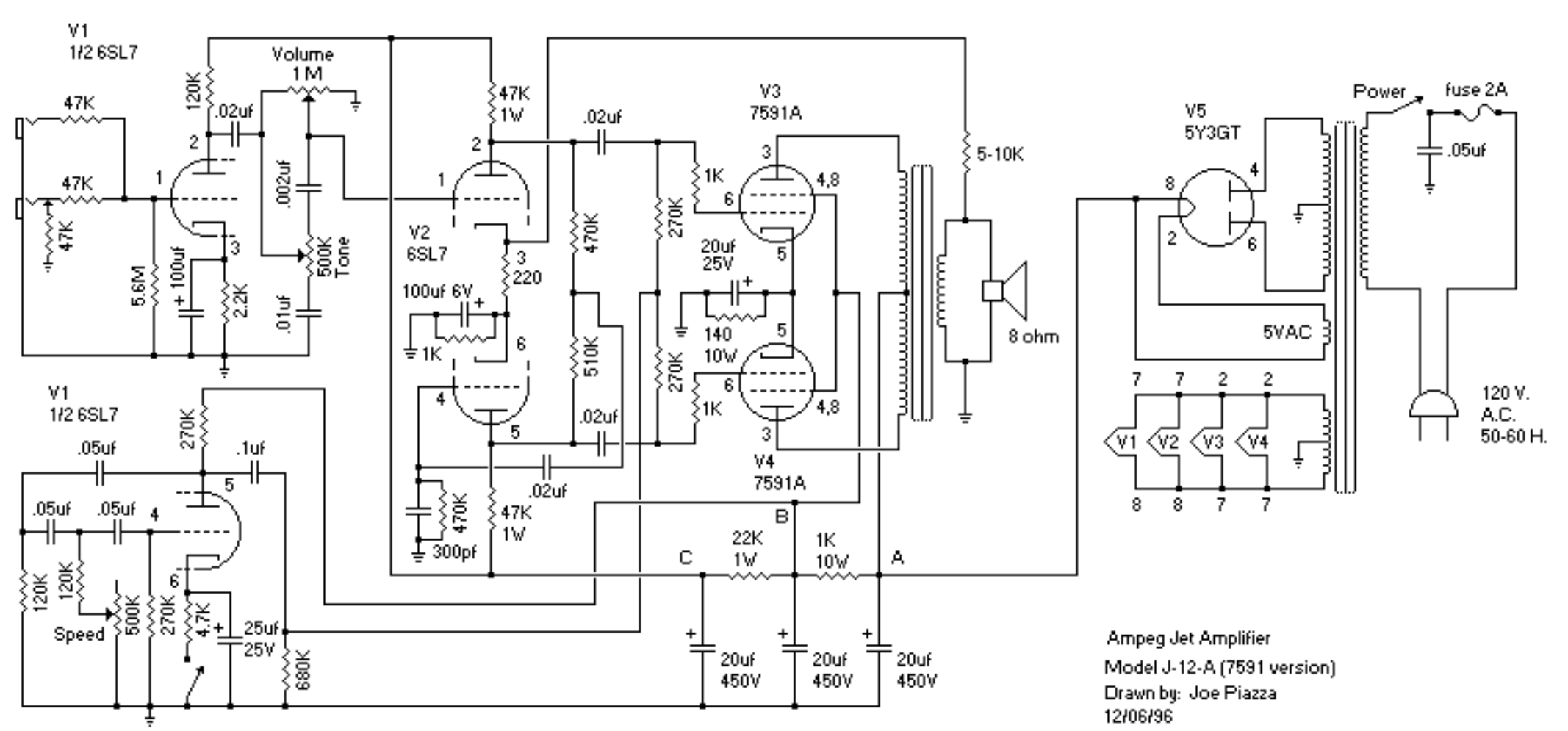
V1
1/2 6SL7
47K
47K
47K
120K
.02uf
Volume
1 M
.002uf
500K
Tone
5.6M
100uf
2.2K
.01uf
V2
6SL7
47K
1W
220
100uf 6V
1K
470K
510K
.02uf
470K
300pf
47K
1W
V3
7591A
1K
270K
20uf
25V
140
10W
270K
1K
V4
7591A
.02uf
5-10K
8 ohm
V5
5Y3GT
5VAC
Power
fuse 2A
.05uf
120 V.
A.C.
50-60 H.
V1
1/2 6SL7
.05uf
270K
.1uf
.05uf
.05uf
120K
120K
Speed
500K
270K
4.7K
25uf
25V
680K
C
22K
1W
B
1K
10W
A
20uf
450V
20uf
450V
20uf
450V
Ampeg Jet Amplifier
Model J-12-A (7591 version)
Drawn by: Joe Piazza
12/06/96